Listen
SOUND MEASUREMENTS MAKE SOUND PRODUCTS

Sequence Note

AES TC-AA Test Suite

Introduction

This test suite contains sequences to measure a vehicle infotainment system to the methods outlined in the Audio Engineering Society (AES) Technical Committee on Automotive Audio (TC-AA) in-vehicle measurements white paper. This white paper aims to define repeatable and defined car audio system measurements and in addition to the measurement methods, contains information on standardized test configuration, for example microphone and seat positioning. Please contact the TC-AA for more information on this project. This test sequence may, of course, be used with your own in-house physical configuration if adherence to the TC-AA guidelines is not essential.

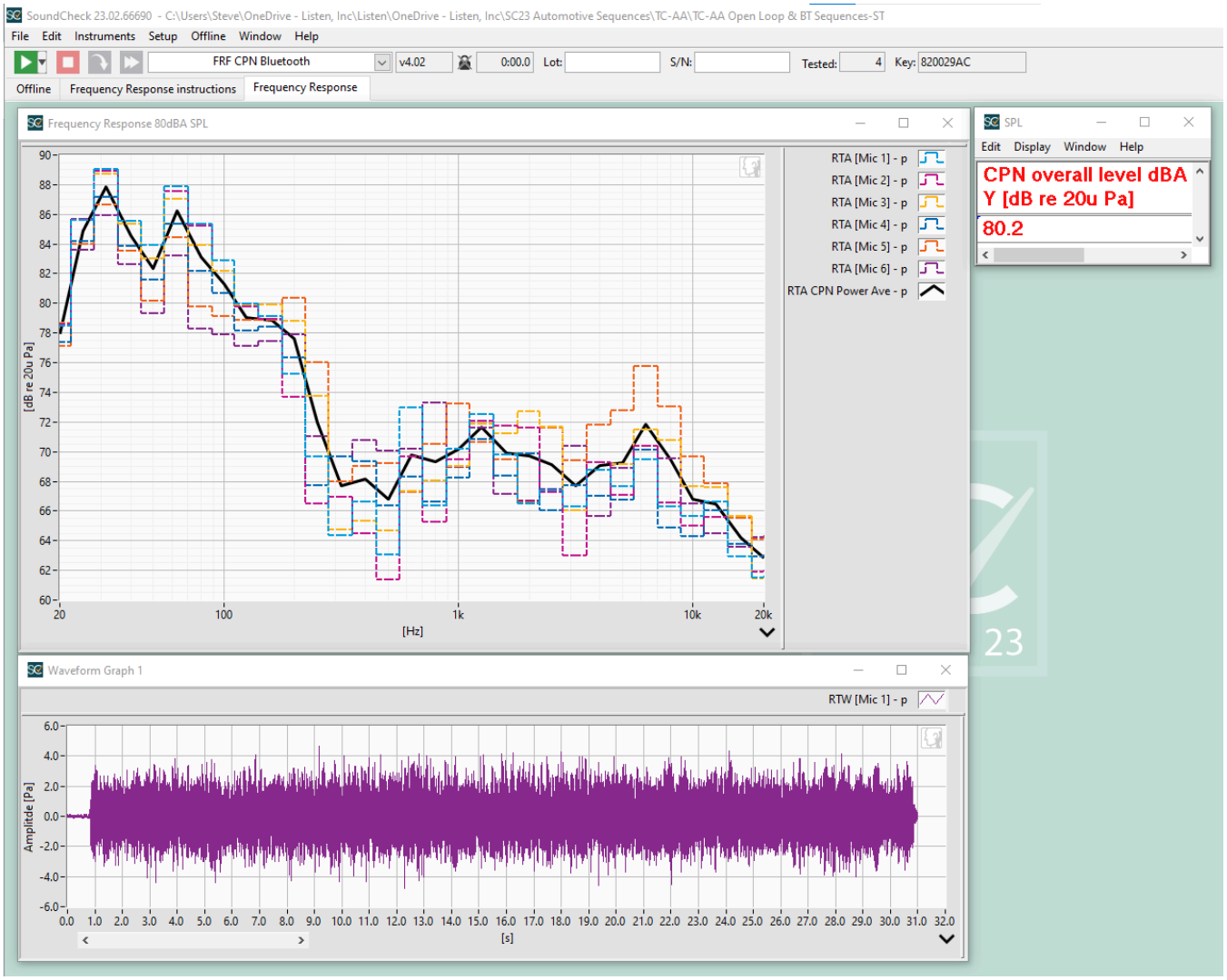

Final display results of FRF CPN Bluetooth

Bluetooth and Open Loop

There are two methods of connecting to the vehicle that are supported with these sequences: Bluetooth and Open Loop.

Bluetooth sequences should be used with a direct Bluetooth connection from a Bluetooth interface to the head unit where the signals can be sent from SoundCheck software. The Echo ATS-BT is recommended for future use. The BTC and BQC are deprecated and are included for legacy purposes.

Open Loop can be used when a direct connection with the SoundCheck software is not possible. Wave file test signals are included in the "Open Loop WAV Files" directory. These files can be loaded onto a USB stick and played directly, onto a phone and played via CarPlay, or any similar method.

To simplify the sequences, there are three folders containing the three options. Whichever connection method used will yield the same results.

If using Bluetooth, Sequence 1 - "Bluetooth Pairing to Head Unit" must be run first to connect to the infotainment system of the vehicle. If using Open Loop, load both Wave files from "Open Loop WAV Files" onto your playback device and you will be prompted during sequence run to play the appropriate signal.

Software Requirements

- SoundCheck Plus Version 24.02 or higher part #1102
- Optional Modules:
    - o 2005 – RTA Analyzer
    - o 2024 – 8 Channel Acquisition
    - o 2042 – Python Custom Step for control of Bluetooth devices

Hardware Requirements

- Interface with 6 inputs
    - Listen AudioConnect 6x2 Part #4049
    - AmpConnect 621 Part #4046

      Note: An audio interface with S/PDIF is required for use with the Echo ATS-BT
- Bluetooth interface
    - Echo ATS-BT Part #5850
    - Portland Tool & Die BTC/BQC Part #5816 (Legacy)
- 6 SCM Microphones or similar. Part #4012
- 6 Microphone Array*, Part #4016

***Please reference the Microphone Array and Position section of the standard for specific requirements**

System Diagram

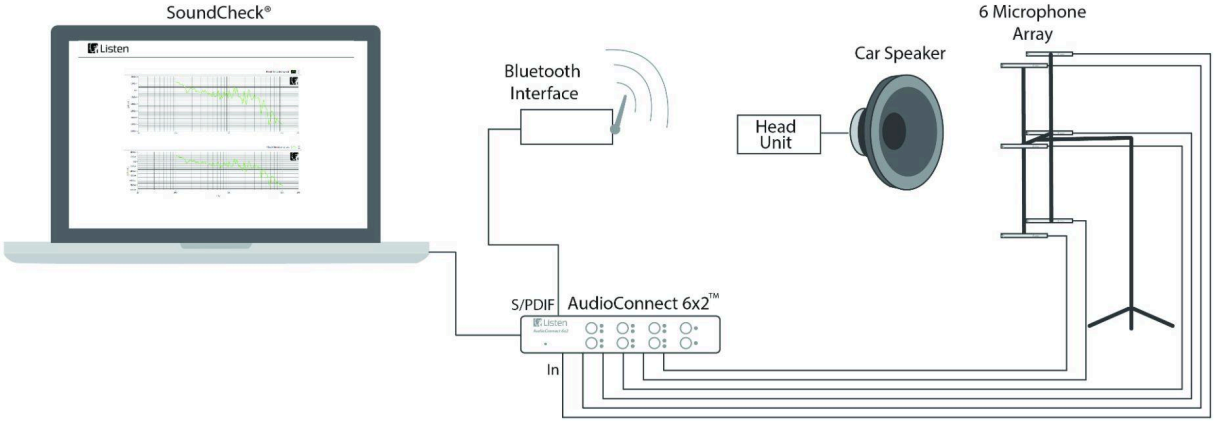

Test Configuration for Bluetooth

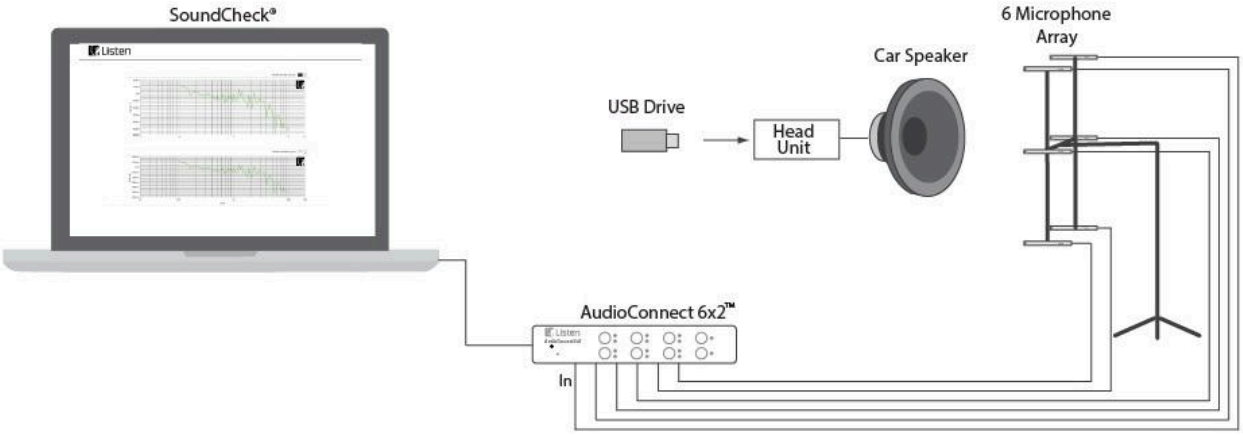

Test Configuration for Open Loop via USB

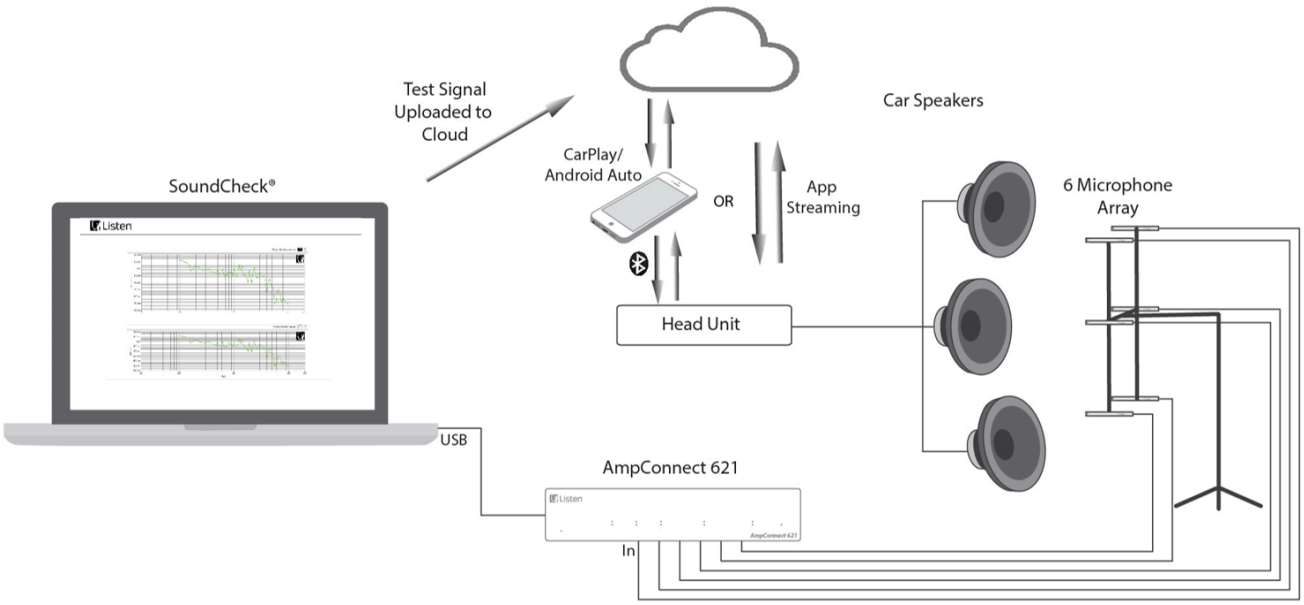

Test Configuration for Open Loop via CarPlay or App Streaming

Software Configuration

At the end of the measurement sequence there is a prompt to save data in the default data folder. This can be adjusted in “Edit > Preferences > Folder Paths > Default Data Path” on a per device basis to make sure all captured data for each unit under test is saved to the same directory.

Your SoundCheck Calibration may not include the Signal Paths used in these sequences. Before opening the sequence for the first time, please take the following steps to import the Signal Paths and associated calibrated device files.

1. Go to Setup > Calibration and press the Import button
2. Browse to the Calibration folder included in the sequence distribution folder, select either the “Open Loop.cal” file, the “BQC BTC Bluetooth.cal” file, or the “Echo ATS-BT.cal” and click OK
3. When prompted to import calibrated device files, select Yes
4. When prompted to overwrite existing calibrated device files, select No

Hardware Setup & Calibration

1. Connect the microphones to input 1-6 of your audio interface
2. Calibrate the microphones as instructed in the SoundCheck manual
3. Place the six microphones in the vehicle, adhering to the microphone array and positioning appendix section in the white paper.
4. All accessible audio system settings should be set to default or factory reset to neutral or flat. These settings should be documented.
5. Depending on your connection method:
    a. BQC BTC Bluetooth – Connect your Bluetooth device and run the sequence “Bluetooth Pairing to Head Unit”. This sequence is written for a PT&D BQC. If using a BTC, message steps labelled “BQC” will need to be changed to BTC.
    b. Echo ATS-BT - Connect your audio interface S/PDIF output to the Echo ATS-BT IN. In SoundCheck’s hardware, make sure Digital Out 1 & 2 signal paths are assigned to the S/PDIF hardware channels.
    c. Open Loop - The audio files included in “Open Loop WAV Files” must be copied and able to be played through the infotainment system. For example, placed on a USB device or loaded on to a phone to be used via CarPlay.

You are ready to start the sequences.

Calibration Sequences

There are two different level calibration sequences. These are used to adjust the infotainment system to either 80 dBA or maximum level. The appropriate level will be specified in each of the following test sequences.

A target level calibration sequence is also available (2c) that can be used to test at different levels if adherence to the TC-AA guidelines is not essential.

Sequences Overview

Sequence Number	Sequence Name	Description	Version Differences
1	Bluetooth Pairing to Head Unit	Used to initially pair the head unit to the Bluetooth interface	**Echo -** Connects via Echo Custom steps **BQC BTC -** Connects via PT&D message steps **Open Loop -** n/a, manually connect using appropriate method
2a-d	Calibration	Calculates the signal level needed for the car infotainment system to output 80 dBA, 90 dBA, or the maximum volume level. Six sound level meters are run simultaneously in a loop to show the Sensitivity Mean and the user must adjust the level of the car infotainment system until this value is within +/- 1 dB of the target.	**Open Loop** - Only contains 80 dBA **Echo -** 2c uses AVRCP to change the Bluetooth level on the fly to reach the target level without manually needing to adjust the infotainment level **BQC/BTC -** 2c uses the mixer volume custom step to change the level of the Bluetooth output on the fly to reach the target level. The custom steps must be edited to select the BQC from the dropdown
3a	FRF CPN	**80 dBA Required** Frequency Response with correlated pink noise	
3b	FRF UPN	**80 dBA Required** Frequency Response with uncorrelated pink noise	
3c	FRF APN	**80 dBA Required** Frequency Response with anticorrelated pink noise	
4	THD	**80 dBA Required** Frequency Response and THD using Stepped Sine Sweep	

5a-b	IMD	**80 dBA Required** Intermodulation distortion. This distortion occurs when a high frequency tone is superimposed on a high-level, low frequency tone. The high frequency signal is modulated by the low frequency. 5a - IMD Slave tone of 50 Hz 5b - IMD Slave tone of 500 Hz	
6	Impulsive Distortion	**80 dBA Required** Impulsive Distortion, also known as BSR (buzz, squeak, and rattle), or Rub & Buzz. This test measures distortion caused by any rattling components in the car, such as loose molding and trim, incorrectly installed drivers, or components susceptible to vibration	
7	SPL Max Volume	**Maximum Volume Required** Measures the maximum sound pressure level that a vehicle's infotainment system can produce	**Open Loop -** n/a
8	Max SPL & THD vs Frequency	**Initial Level will be adjusted to reach target** User defined start and stop frequency ranges are entered. Limits can be set on Compression, THD, Rub & Buzz, or Perceptual Rub & Buzz. The frequencies are played one at a time at a set starting level, increasing until the user defined limit is set or the maximum level of the output is reached. The final display will show a curve of maximum SPL per frequency	**Open Loop -** n/a

Further Sequence Development

Ways in which you could modify or further develop the sequence include:

- Autosave steps can be hard coded to no longer prompt the user for a default data path
- AVRCP steps can be added within sequences to automatically play at different levels
- User defined limits can be set for your particular vehicle targets